| Parts List | | | |
|---|---|---|---|
| Qty | Part Number | Material | Mass |
| 1 | 2026-03-30-06-31-56-973 | Steel | 175.902 g |

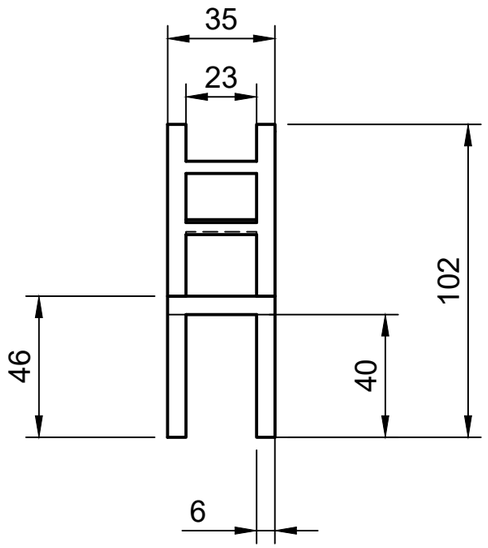


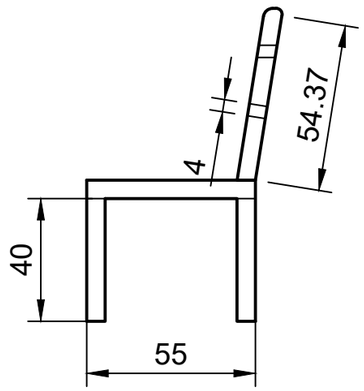


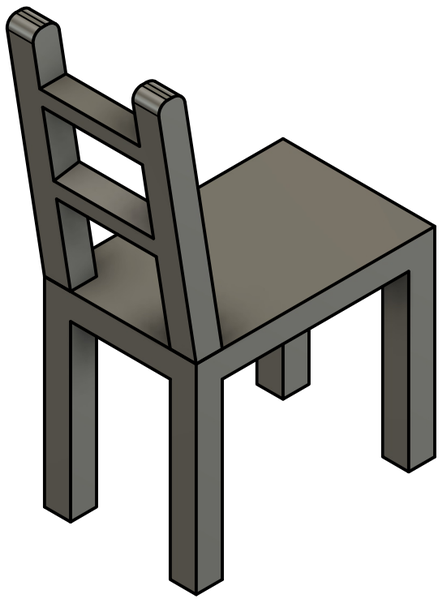

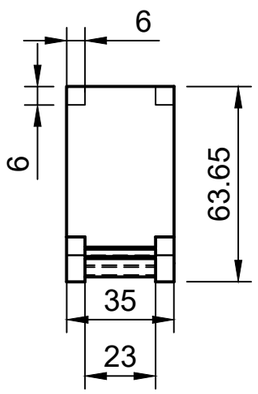


| Dept. | Technical reference | Created by | Approved by |
|---|---|---|---|
| CSE | 212225040230 | MEGALA M S | DR.SARAVANAN M P |
| | | Document type: SKETCH | Document status |
| | | Title: EX:7:CREATE A 3D SOLID MODEL FROM ORTHOGRAPHIC PROJECTION | DWG No. |
| | | | Rev. E.N / Date of issue 12/2/2026 / Sheet 1/1 |